SSJ Group
Power Transmission

SLEWING DRIVES

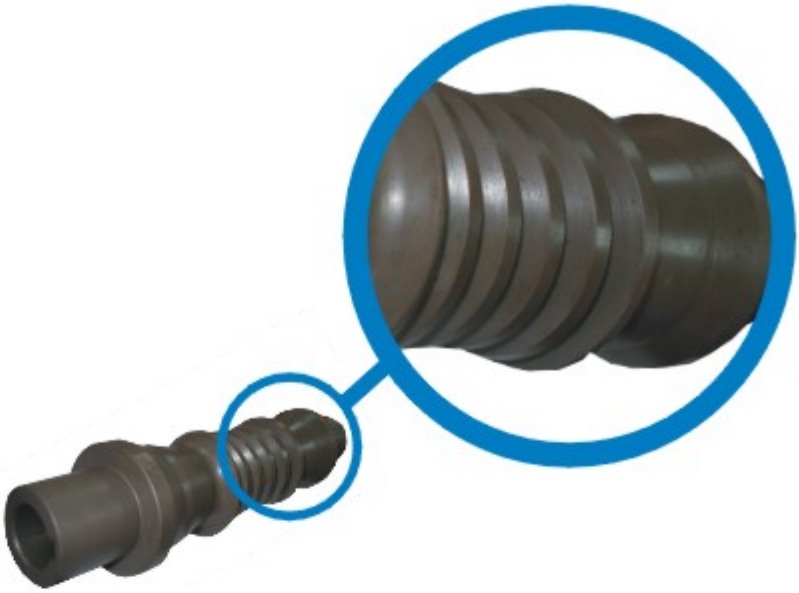

Tel: +39 0522 552237
Email: info@ssjgroup.com

SSJ Group Co. Ltd., 49-51 Jervois Street, Sheung Wan, Hong Kong

SSJ Group
Power Transmission

SLEWING DRIVES

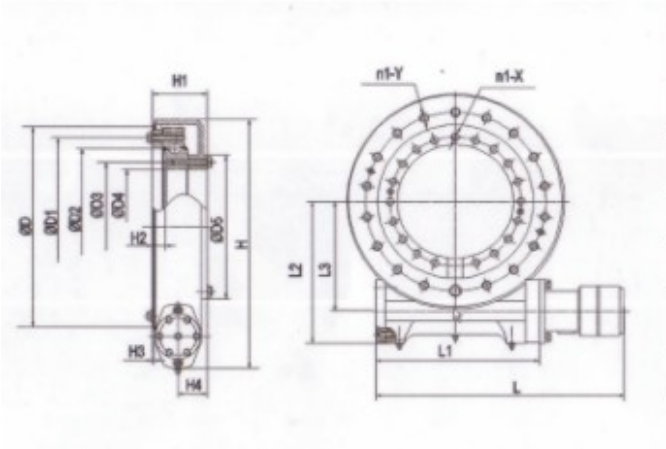

Data \ Type	7	9	12	14	17	21	25
Rated output torque /kN-m	1	8	9	11	14	17	20
Tilting Moment torque /kN-m	13.5	33.9	54.3	67.8	135.6	203	271
Static load rating, axial /kN	133	338	475	555	970	1598	2360
Static load rating, radial /kN	53	135	190	222	390	640	945
Dynamic load rating, axial /kN	32	81	114	133	235	385	590
Dynamic load rating, radial /kN	28	71	100	117	205	335	470
Gear ratio	73:1	61:1	78:1	85:1	102:1	125:1	150:1
Self-locking gear	yes	yes	yes	yes	yes	yes	yes
Weight /kg	23	50	60	73	110	158	230

Type \ Size	L	L1	L2	L3	H	H1	H2	H3	H4	ΦD	ΦD1	ΦD3	ΦD4	ΦD5	N1-Y	N1-X
7	352	182	166	132.7	295	81	23.4	4.3	42.5	237.5	203.2	120.6	98	145	8-M12	10-M12
9	484	314	239	174.1	411	108	29	4.4	54.5	316	270	175	145	204	16-M16	15-M16
12	498	324	285	220	500	110.5	27	4.4	58.5	401.5	358	259	229	289	18-M18	19-M16
14	500	330	303	238	530	110	28	3.5	59	435.5	390	295	265	325	18-M18	23-M16
17	508	338	340	275.3	615	126	26	4.6	66	522	479.4	365.1	324	406	20-M16	20-M16
21	631	461	398	333	732	136.5	3.3	4.5	76	616	584.2	466.7	461.8	532	36-M20	35-M20
25	631	461	467	401.8	863	133.2	6.2	4.5	76.2	744	675	565	512	628.5	36-M20	35-M20

SSJ Group Co. Ltd., 49-51 Jervois Street, Sheung Wan, Hong Kong
Tel: +39 0522 552237
Email: info@ssjgroup.com